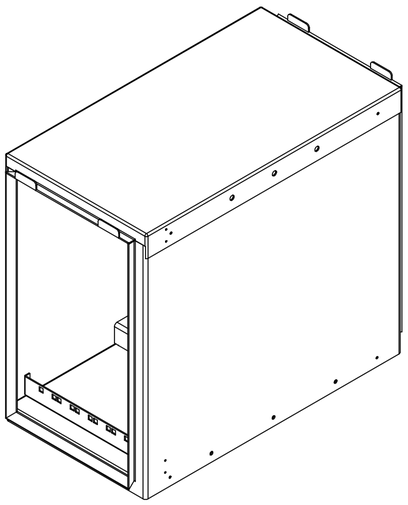

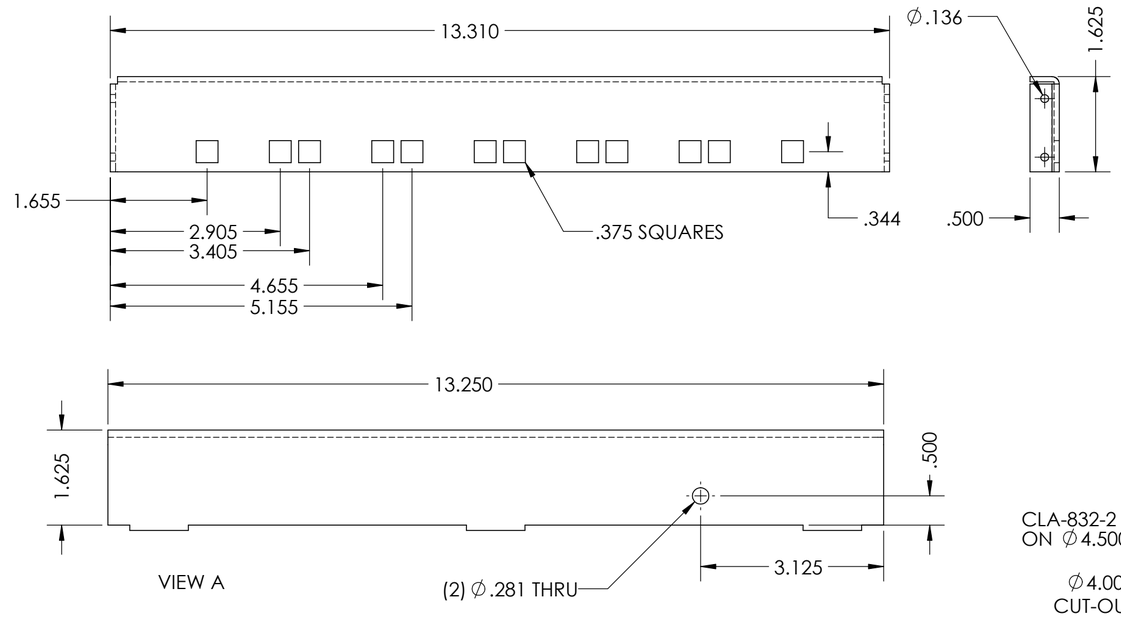

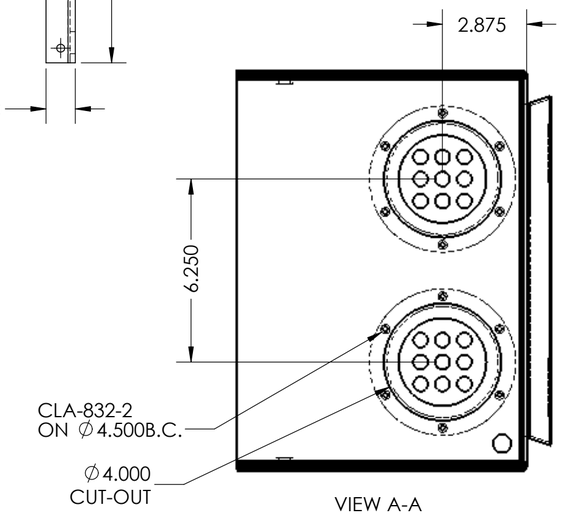

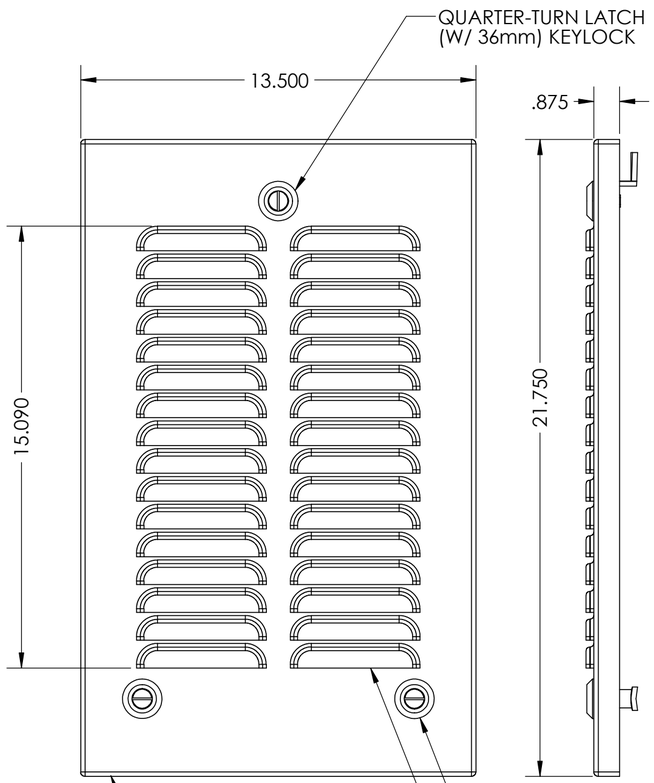

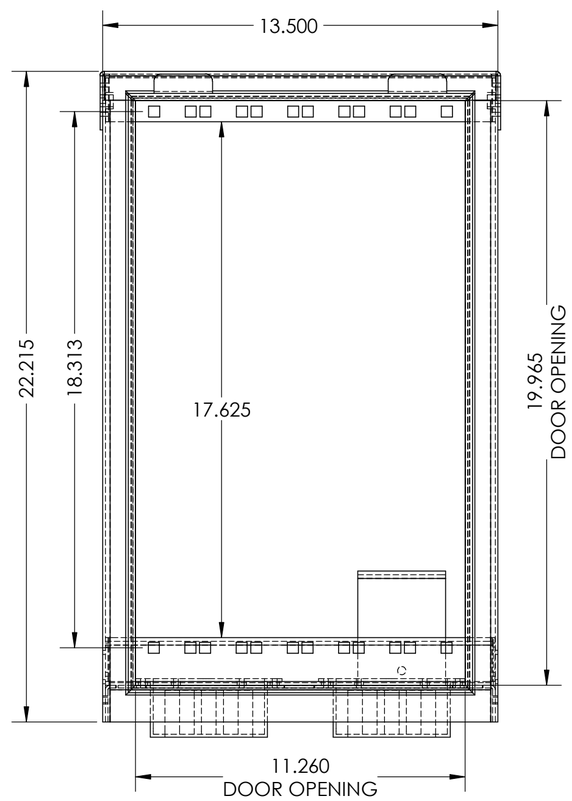

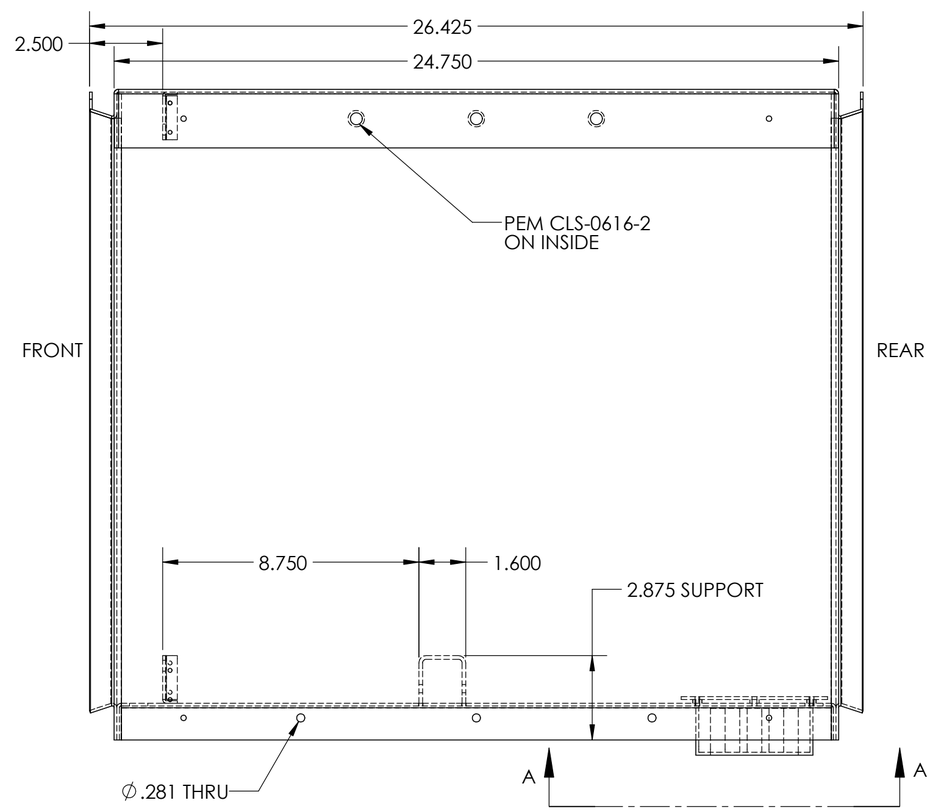

- NEOPRENE GASKET 1" x 3/8" THK. AROUND DOOR
- INSECT SCREEN AND 3M DOUBLE SIDED FOAM TAPE ON TOP & BOTTOM THEN APPLY RTV 737 (DOW CORNING) OVER EXPOSED OVERSIZE TAPE.

QUARTER-TURN LATCH (W/36mm CAM)SLOTTED LOCK TYP. 2PLS.

LOUVERS (4.50 x .625 x .18 MIN.) TYP. 32PLS.

CONSTRUCTION: .090" ALUM

PROPRIETARY AND CONFIDENTIAL

THE INFORMATION CONTAINED IN THIS DRAWING IS THE SOLE PROPERTY OF **ADCOMM, INC.** ANY REPRODUCTION IN PART OR AS A WHOLE WITHOUT THE WRITTEN PERMISSION OF **ADCOMM, INC.** IS PROHIBITED.

NEXT ASSY	USED ON
APPLICATION	

UNLESS OTHERWISE SPECIFIED:

DIMENSIONS ARE IN INCHES
TOLERANCES:
FRACTIONAL ±
ANGULAR: MACH ± 1° BEND ±
TWO PLACE DECIMAL ± .01
THREE PLACE DECIMAL ± .005

INTERPRET GEOMETRIC TOLERANCING PER:

MATERIAL

FINISH

DO NOT SCALE DRAWING

	NAME	DATE
DRAWN		
CHECKED		
ENG APPR.		
MFG APPR.		
Q.A.		

TOP ASSY.#

PROJ. NO:

CCI EXTENDING WIRELESS PERFORMANCE

TITLE:
ASSY-6U SINGLE SECTOR OUTDOOR CABINET-RXAIT

SIZE	DWG. NO.	REV
C	OL-C206251	F

SCALE: 1:4 | WEIGHT: | SHEET 1 OF 2